Document Title :- Finder 15.11 Lighting Mains ONLY plan
Last edited :- January 2024
Ideal Print Size :- ISO A2

mdar
Making Dreams a Reality
www.mdar.co.uk

velbus® makes life easy
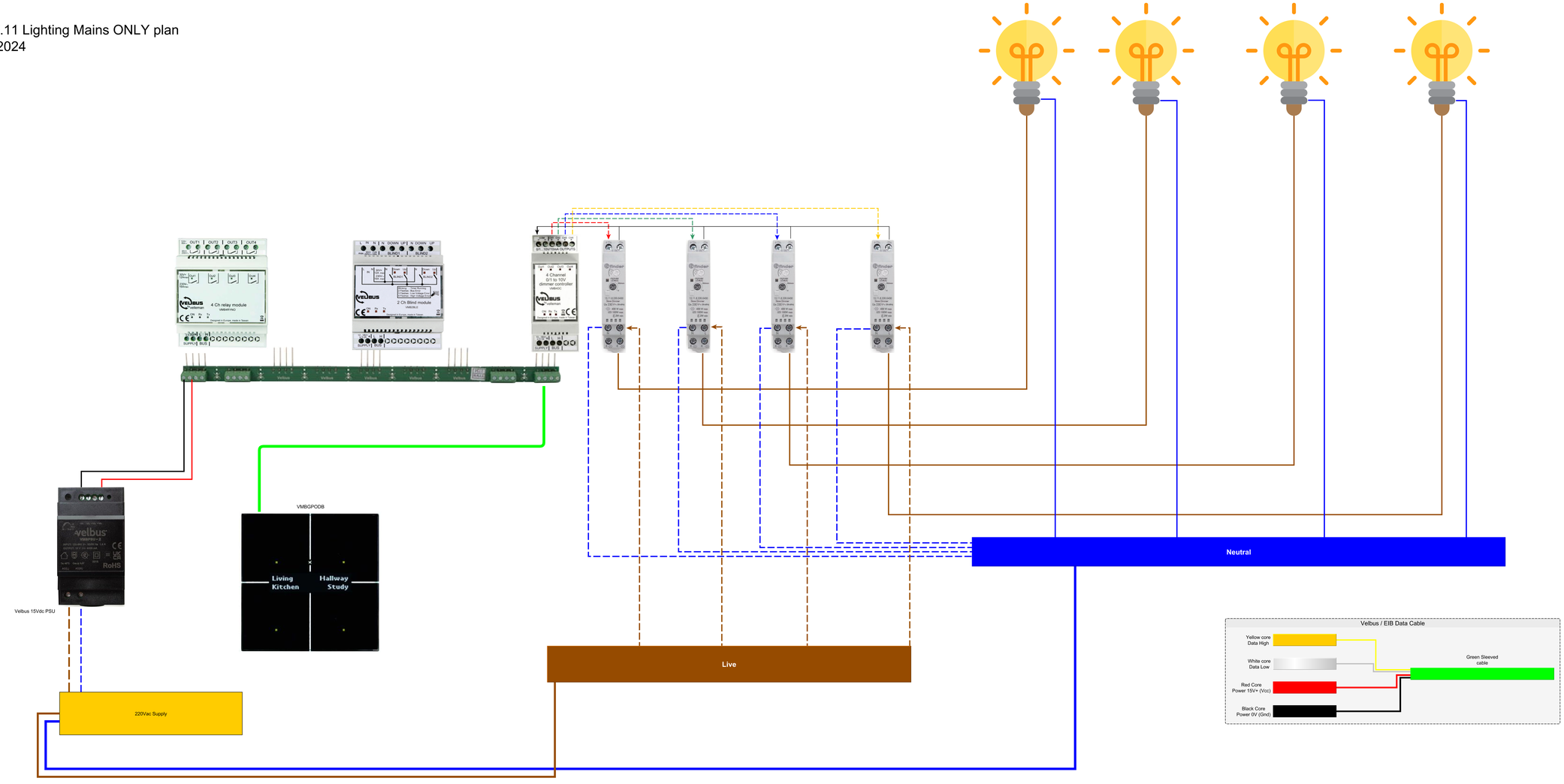
velbus.co.uk/downloads/