Document Title :- Basic Wiring - Multiple cabinets - Velbus V2.0
Last edited :- Sept 2025
Ideal Print Size :- ISO A2

velbus® makes life easy

www.velbus.eu

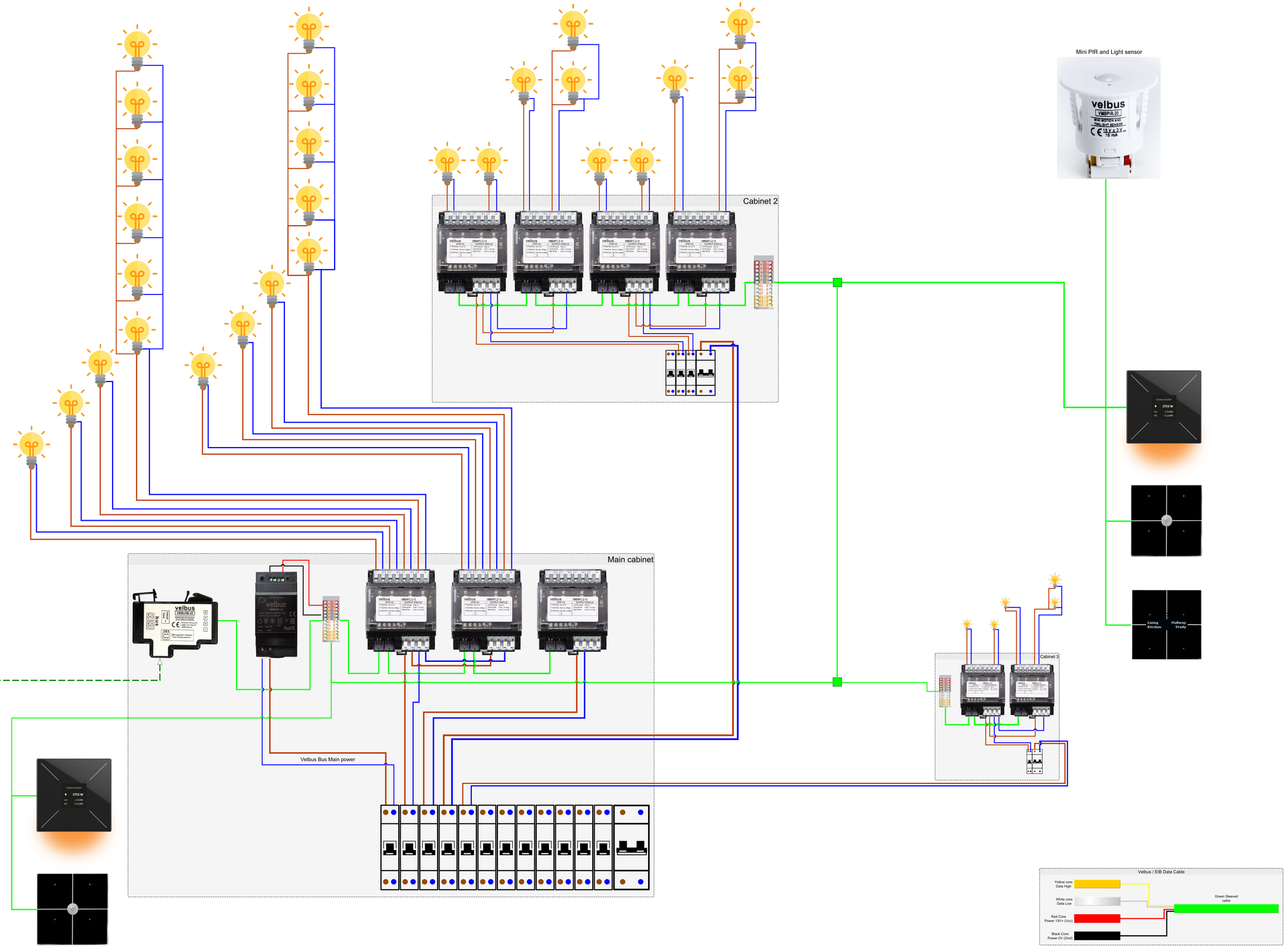

Control4

openremote

openHAB
empowering the smart home

Home Assistant

Trigrr

dar
Making Dreams a Realit

https://installers.velbus.co.uk

velbus.co.uk/downloads/